Print Status: Review

HEAD JAMB

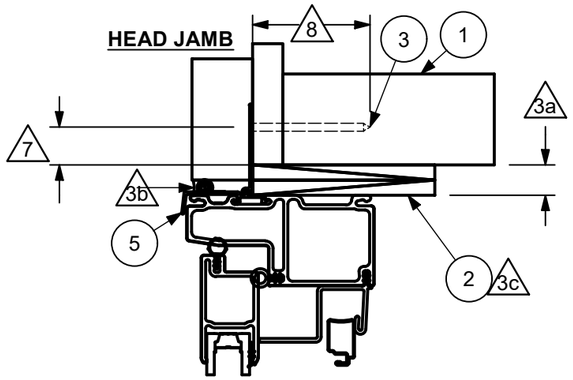

JAMB

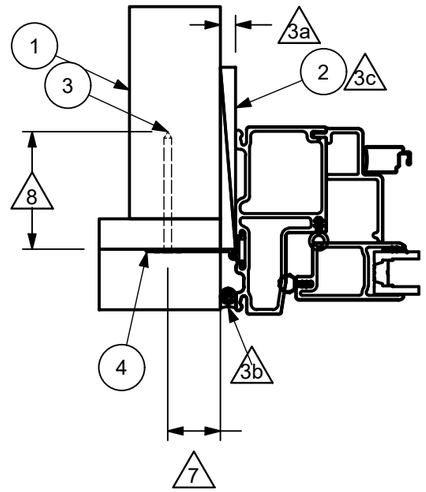

SILL

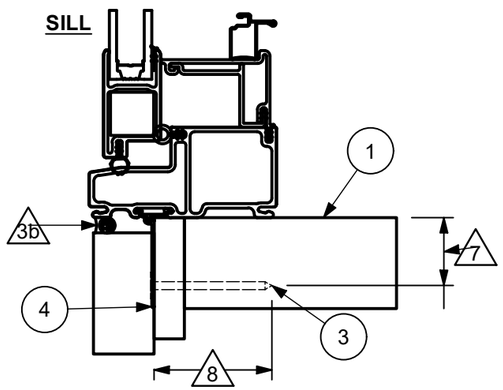

NAIL FIN INSTALLATION

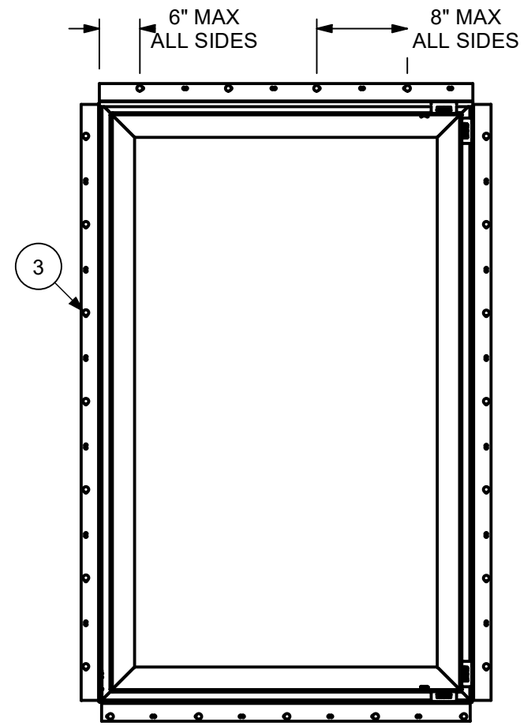

SCALE 1 : 12

NAIL FIN INSTALLATION

- APPLY TO ALL FOUR SIDES OF UNIT
- MIN OF TWO FASTENERS PER SIDE

GLAZING DETAIL

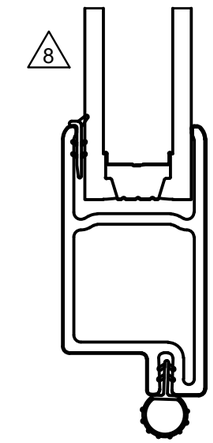

UNIT	MAX FRAME SIZE	DP RATING
ESAWN	47-1/2 X 35-1/2	+40/-40
ESCA	35-1/2 X 71-1/2	+40/-40
ESCA	35-1/2 X 54	+40/-40
ESCA	35-1/2 X 34	+40/-40
ESCA	27-7/16 X 71-1/2	+40/-40
ESCA P	71-1/2 X 71-1/2	+40/-40
ESCA TR	71-1/2 X 71-1/2	+40/-40

NOTES:

1. FOR GENERAL SPECIFICATIONS, REFER TO DOC 00003952
2. THIS PRINT IS FOR STRUCTURAL PERFORMANCE ONLY. FOR FLASHING & SEALING INSTRUCTIONS, REFER TO THE INSTALLATION INSTRUCTIONS
3. △ APPLY TO ALL INSTALLATION METHODS:
   a. ROUGH OPENING:
      -MAX OF 1/4" INCH GAP AT POINTS OF ATTACHMENT ON JAMBS AND 1/2" AT HEAD JAMB
   b. SEALANT:
      -USE ASTM C920 GRADE NS CLASS 25 SEALANT OR EQUIVALENT
      -SEAL BETWEEN NAILING FIN AND BUCK ON ALL FOUR SIDES OF THE UNIT
      -SEAL AROUND FRAME TO WALL WITH BACKER ROD AND SEALANT
   c. SHIMS:
      -A SHIM MUST BE PLACED AT 4" TO 6" FROM EACH CORNER, EXCLUDING SILL
      -ALL OTHER SHIMS MUST BE PLACED A MAX OF 15" APART
4. THIS PRINT IS FOR STRUCTURAL PERFORMANCE ONLY. FOR FLASHING AND SEALING REQUIREMENTS, REFER TO THE INSTALLATION INSTRUCTIONS
5. IF CHEMICALLY TREATED LUMBER IS USED FOR BUCK MATERIAL, FASTENERS INTO THE BUCK MUST BE A MINIMUM OF .90 OZ/FT^2 ZINC HOT DIPPED GALVANIZED STEEL TYPE 304 OR 316
6. △ MINIMUM NAIL EMBEDMENT DEPTH: 1-15/16"
7. △ MINIMUM EDGE DISTANCE: 1/2"
8. △ GLASS COMPLIES WITH ASTM E1300

ITEM	DWG NO	DESCRIPTION
5	00088288	NAILING FIN W/ DRIP CAP
4	00037405	NAIL FIN, LOCKING
3	NA	2" GALVANIZED ROOFING NAIL
2	NA	SHIM
1	NA	STANDARD FRAMING MATERIAL

PARTS LIST

CATEGORY:
CASEMENT

UNIT TYPE:
ESCA, ESAWN, ESCA P, ESCA TR

REV	DESCRIPTION / REQUESTOR	ECN NO	DATE	REV BY
7.2	ADDED SIZE CART, UPDATED 7" TO 8" MAX ALL SIDES, ADDED GLASS DETAIL	27573	6/1/2023	JH

MARVIN® RESEARCH & DEVELOPMENT

COLLECTION: ESSENTIAL

DWG TYPE: INSTALLATION
DESCRIPTION: INSTALLATION METHODS/ELEVATIONS, NAIL FIN

CHK: JDD 06/07/23	**SIZE:** B	**CLASS:** MISC	**DWG NO:** 00066687
APP: CRR 06/05/23	**SCALE:** 1 / 12	**DATE:** 12/1/2009	**DWG BY:** WAGNER, MICHAEL	**SHEET:** 1 OF 2

Template Version 14

NOTICE - CONFIDENTIAL INFORMATION
The information in this document is privileged and strictly confidential. The information contained herein shall be used only by Marvin employees and by those agents or suppliers granted official written permission. If the reader of this document is not the intended recipient, or the employee or agent of the intended recipient, please delete this document from all data storage devices, and destroy all hard copies. Any unauthorized dissemination, distribution, copying or other use of the information contained in this document is strictly prohibited.